8 027908 477385

D812167 00550_004 13-06-14

AUTOMATIC BOLLARD

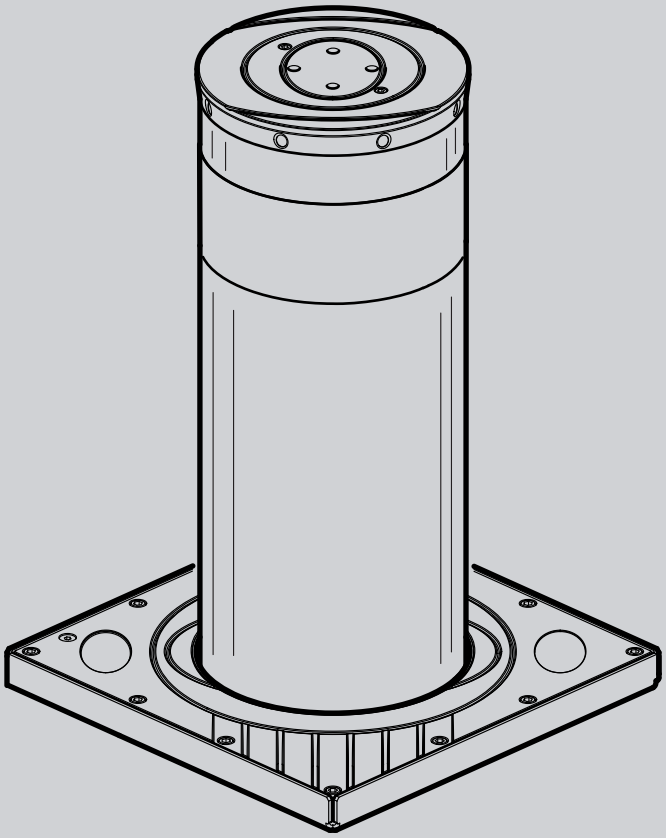

PILLAR B

INSTALLATION AND USER'S MANUAL

Caution! Read "Warnings" inside carefully!

The INSTALLATION, USE AND MAINTENANCE handbook is for installers, users and maintenance engineers.
Please read it carefully before installing the appliance, before using it and before routine or extraordinary maintenance work.

Operations that, if not carried out correctly, can be risky, are indicated with the following symbols :

The manufacturer is not liable for injury to people or animals or damage to things in the case of applications that exceed the limits specified on the enclosed technical data sheet or by a use different from what the appliance has been designed.

GENERAL

The deterrent bollard is the ideal solution for managing vehicle traffic in compliance with modern urban furnishing requirements. It can be used to contol entrances or to safeguard private areas in total safety.

TECHNICAL SPECIFICATIONS

Power.....**230** Vac ± **10**% ; **50**÷**60** Hz; **500** W
Working frequency.....**3.000** / 24h
Protection level.....IP**67**
Control unit.....PERSEO CBD / PERSEO CBE

Working temp.....**-40 +60** °C
Working time.....**5** s. (PILLAR B 600); **6,5** s. (PILLAR B 800)
Weight.....**130** kg (PILLAR B 600); **140** kg (PILLAR B 800)

1 OVERALL SIZE DIMENSIONS

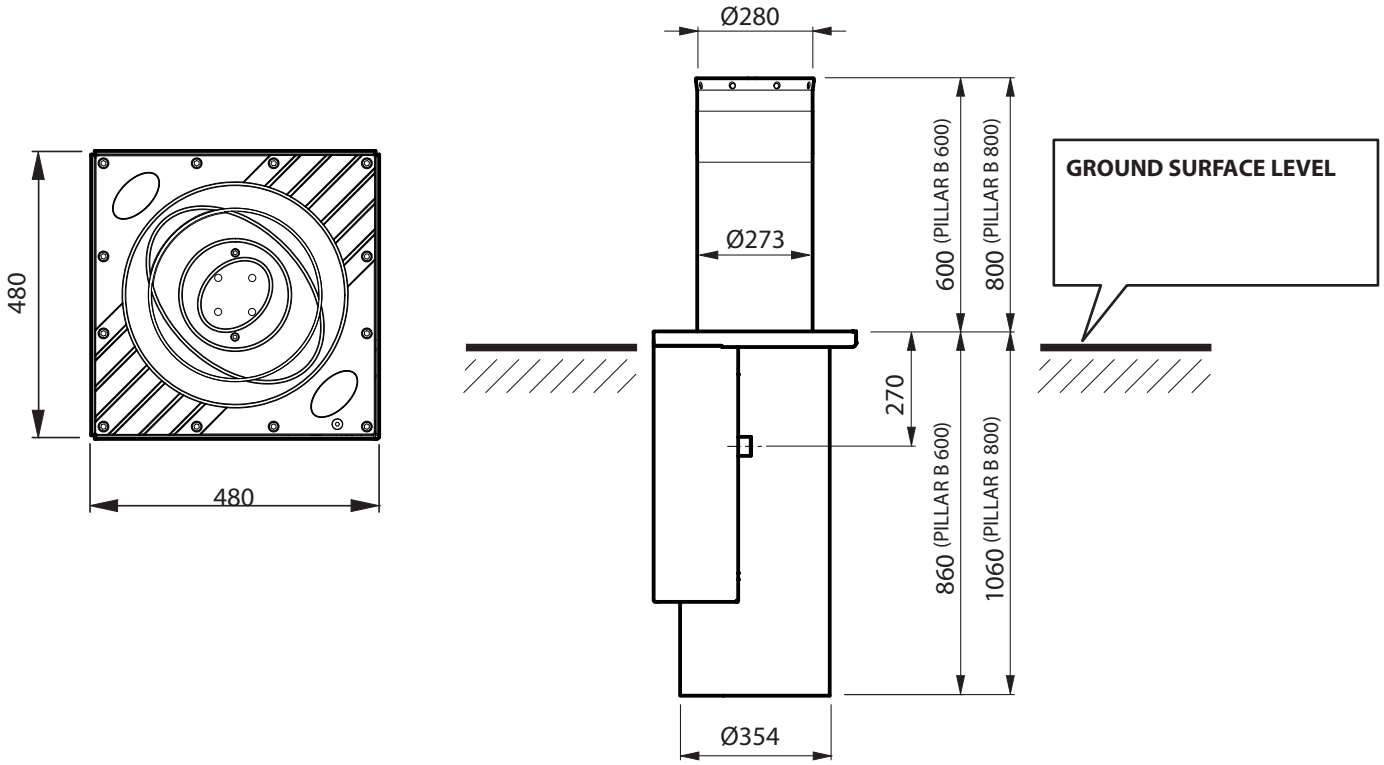

2 LAYOUT

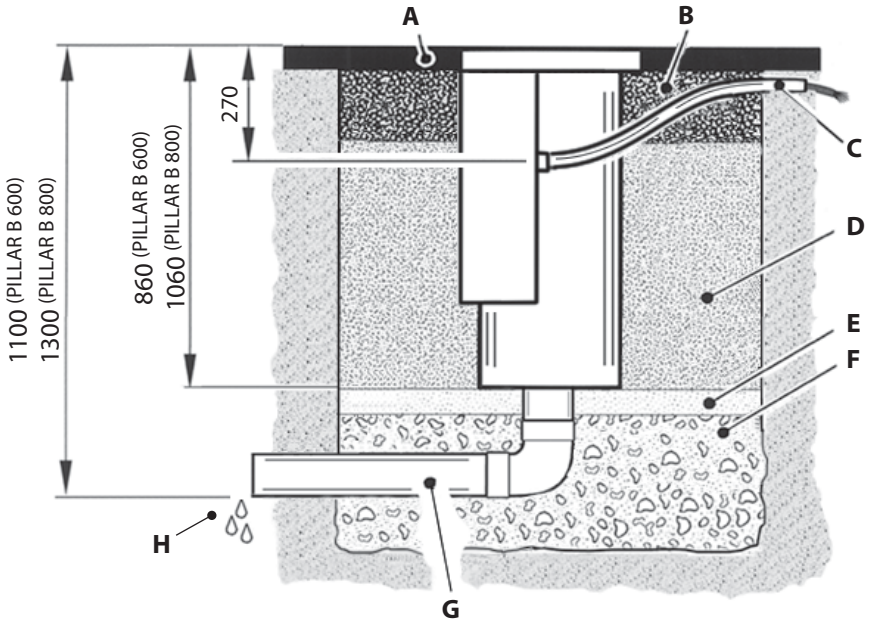

A	Road surface
B	Cement
C	Sheathing Ø50
D	Compact sand
E	Fine sand

F	Pebble gravel
G	Drainage Ø125
H	Connection to the sewer network

3 WIRING NOTE

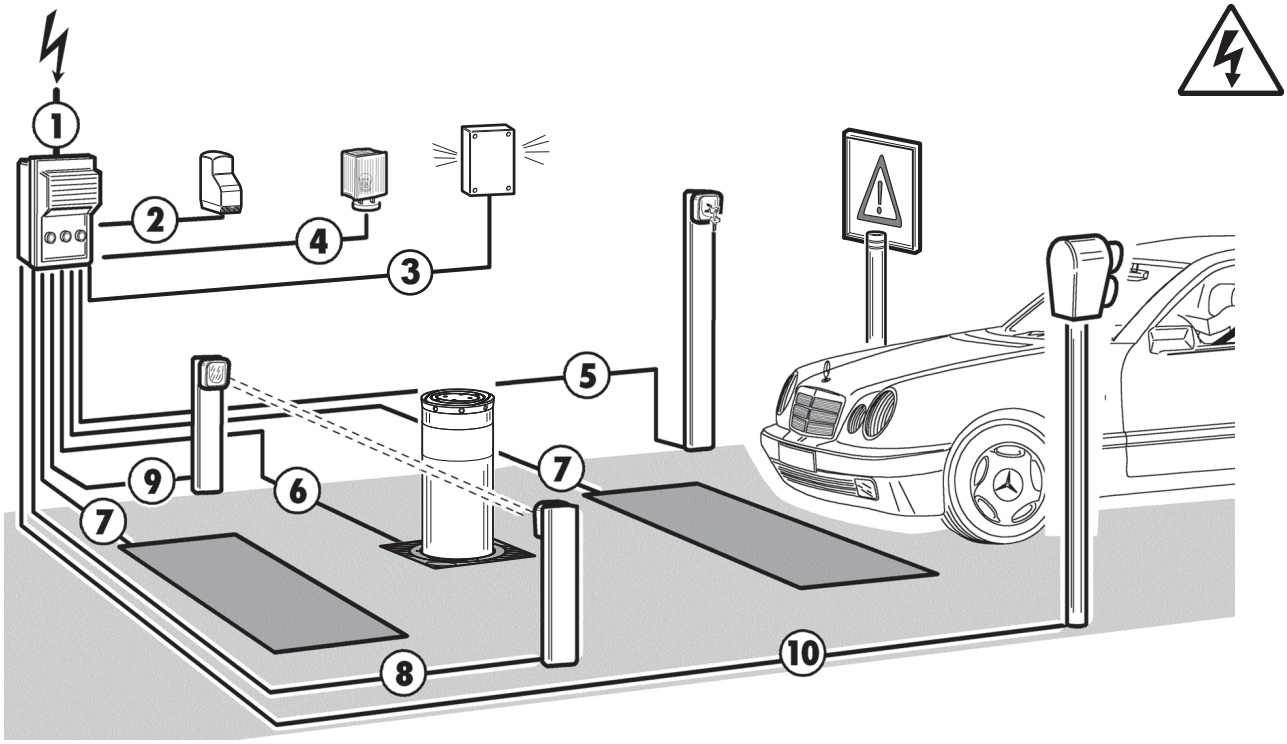

1	Single-phase line	**H05VV 2 x 1,5 + T**
2	Receiver	**4 x 0,5**
3	SOS	**4 x 0,5**
4	Flasher	**2 x 0,5**
5	Key selector	**2 x 0,5**
6	PILLAR B	**Cable supplied by us**
7	Detector-Request instruction	**Twisted cable**
8	Trasmitter photocell	**2 x 0,5**
9	Receiver photocell	**4 x 0,5**
10	Traffic light	**3 x 0,5 + T**

4 FOUNDATION

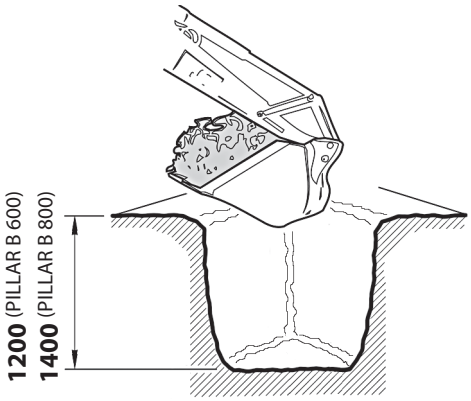

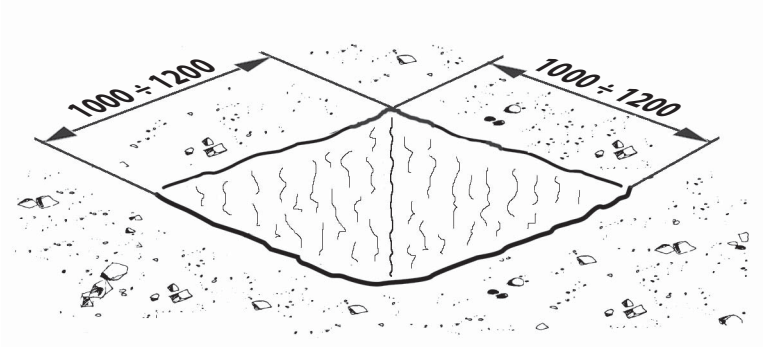

5 DRAINAGE

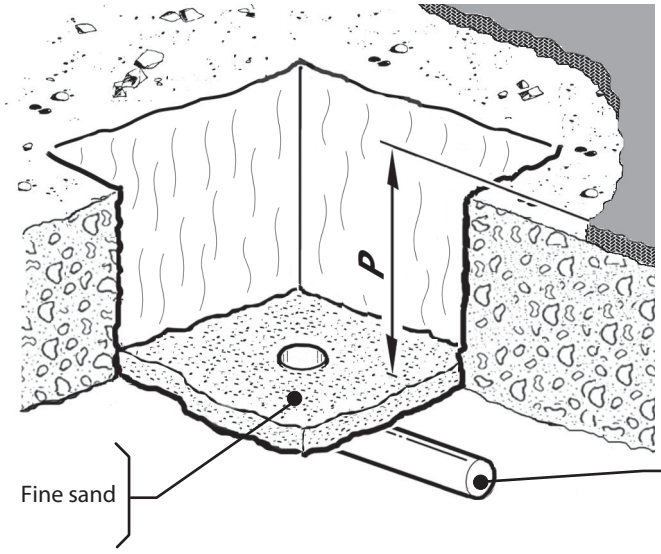

P	
PILLAR B 600	860 mm
PILLAR B 800	1060 mm

6 FIT THE BOLLARD

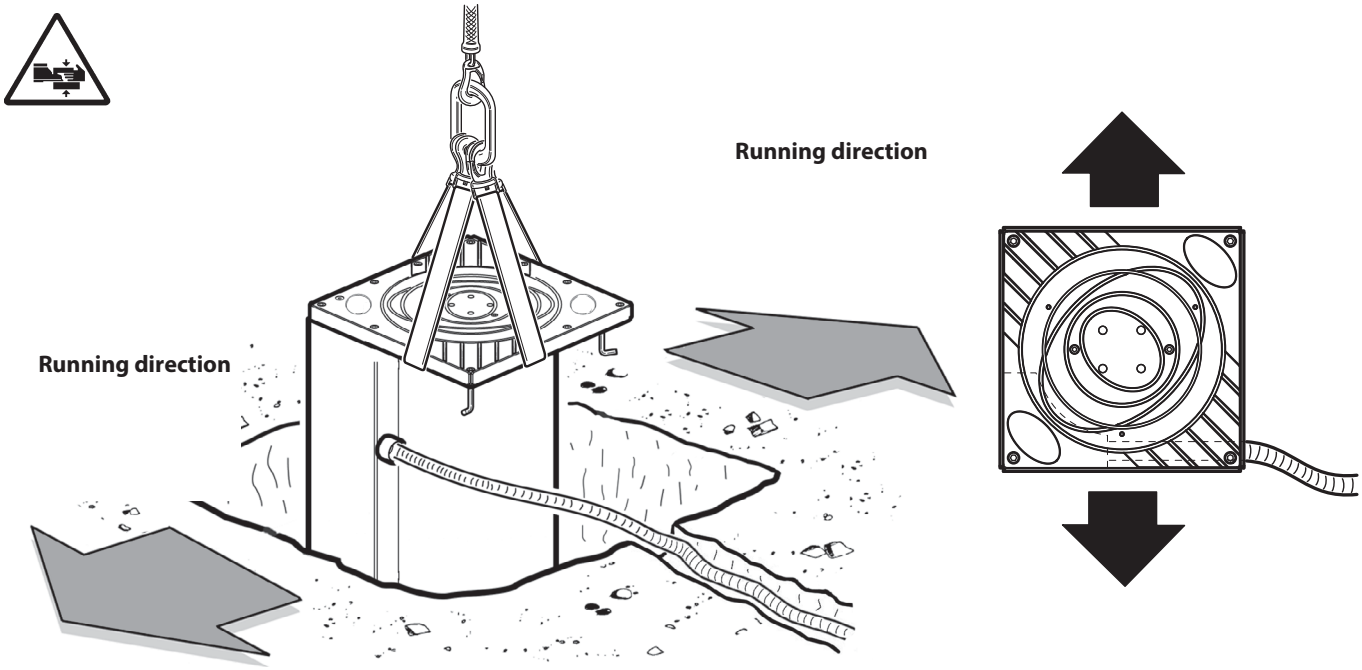

7 LEVEL WITH THE ROAD

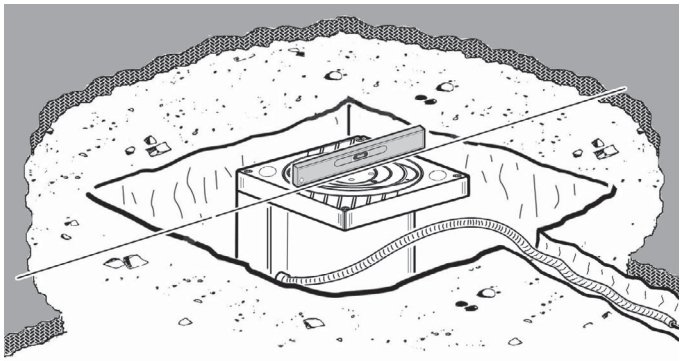

8 FILL WITH SAND TO ~250 MM FROM THE ROAD SURFACE

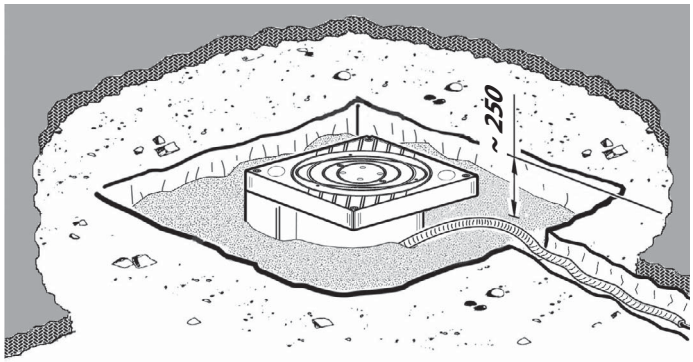

9 LAY THE ELECTROWELDED MESH

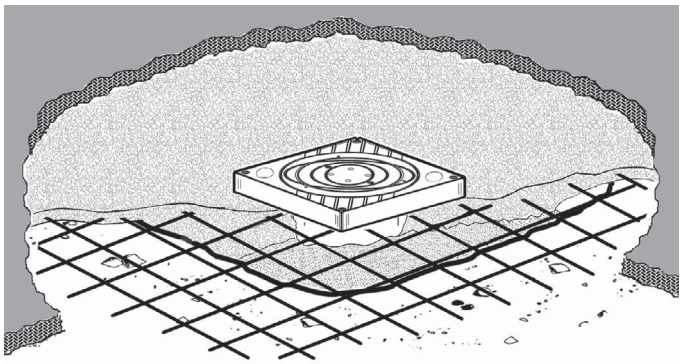

10 FLOORING COMPLETION

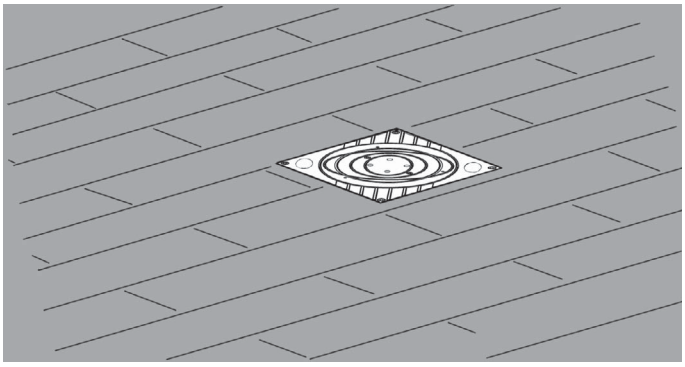

11 ELECTRICAL CONNECTIONS

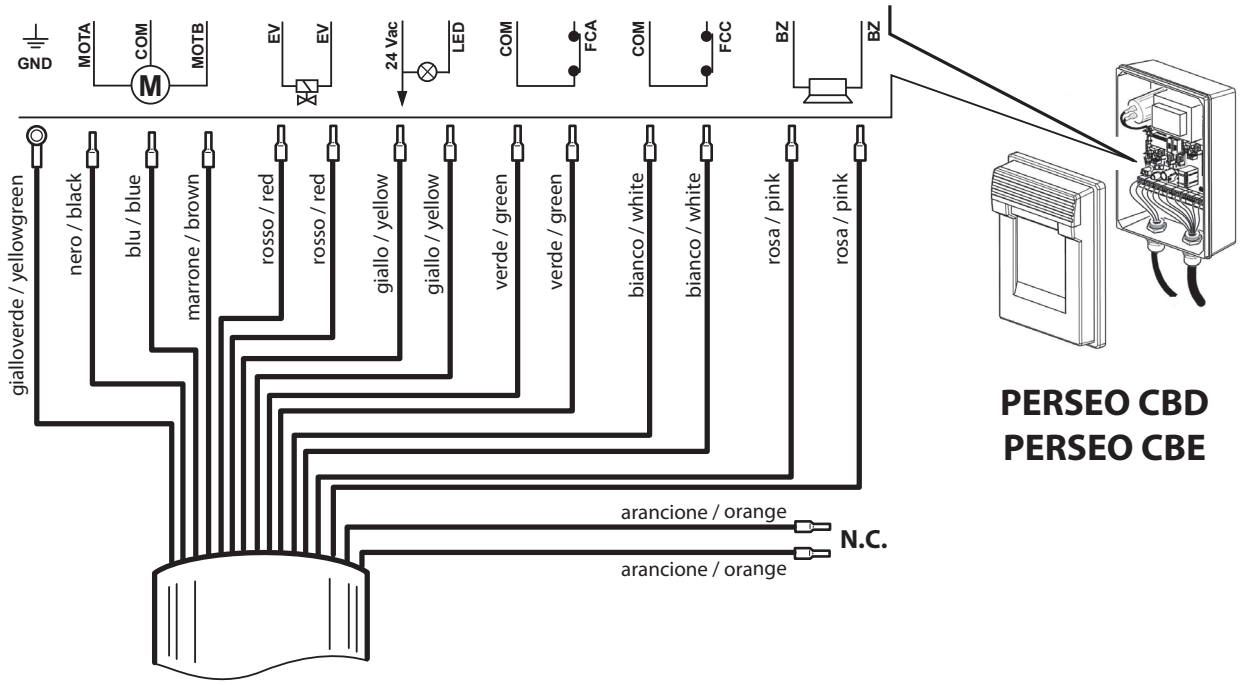

Consult the PERSEO CBD / PERSEO CBE control unit's installation and operating manual.

12 HAND MANOEUVRE

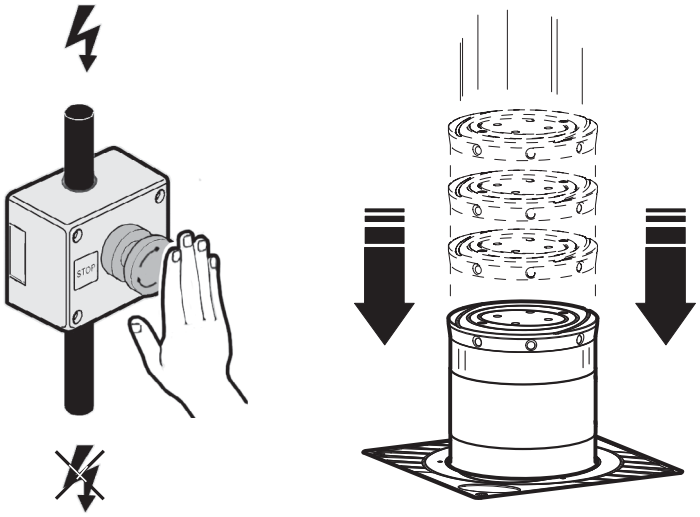

The deterrent bollard lowers spontaneously when you disconnect the power supply.

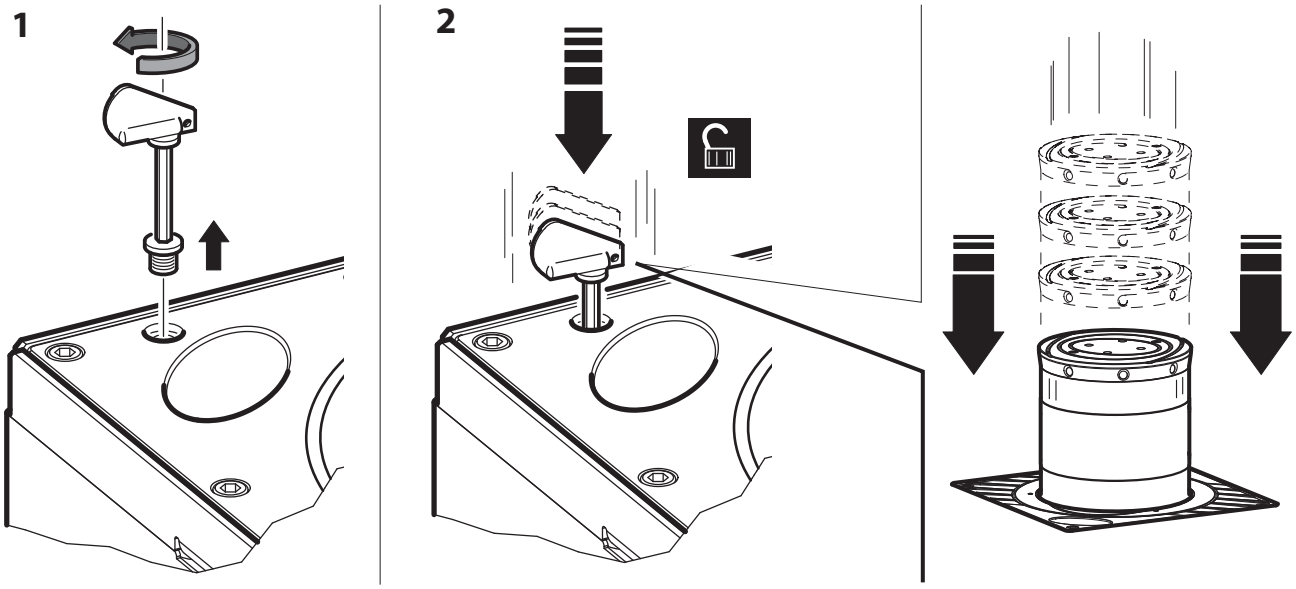

GENERAL SAFETY

- For safety reasons and to comply with current standards, we recommend using the control unit.
- The construction components of this product must comply with the following European Directives: **2004/108/CEE**, **2006/108/EEC**, **2006/42 EEC** and subsequent amendments. As for all non-EEC countries, the above-mentioned standards as well as the current national standards should be respected in order to achieve a good safety level.
- The Company declines all responsibility for any consequences resulting from failure to observe Good Technical Practice when installing the device described in the present manual.
- Do not install the product in potentially explosive atmosphere or wherever there is a fire risk.
- Disconnect the electrical supply before carrying out any work on the installation. Also disconnect any buffer batteries, if fitted.
- Fit an omnipolar or magnetothermal switch on the mains power supply, having a contact opening distance equal to or greater than 3,5 mm. Also fit an adequate cut-out device for the buffer batteries.
- Check that a differential switch with a 0.03A threshold is fitted just before the power supply mains.
- Check that earthing is carried out correctly.
- Installation must be carried out using the safety devices and controls prescribed by the EN 12978 Standard.
- Fit all the safety devices (photocells, electric edges etc.) which are needed to protect the area from any danger caused by squashing, conveying.
- Position at least one luminous signal indication device (blinker) where it can be easily seen, and fix a Warning sign next to the structure.
- Only use original parts for any maintenance or repair operation. The Company declines all responsibility with respect to the automation safety and correct operation when other producers' components are used.
- Do not modify the automation components, unless explicitly authorised by the Company.
- Scrap packing materials (plastic, cardboard, polystyrene etc) according to the provisions set out by current standards. Keep nylon or polystyrene bags out of children's reach.
- Anything which is not expressly provided for in the present instructions, is not allowed.
- Instruct the product user about the control systems provided and the manual opening operation in case of emergency.
- Do not allow persons or children to remain within the automation operation area.
- Keep radio control or other control devices out of children's reach, in order to avoid unintentional automation activation.

USE

- Consult the control unit's installation and operating manual.
- Follow the instructions given in point **15** to release in the case of emergency.

ROUTINE MAINTENANCE (EVERY 6 MONTHS)

- Maintenance must be carried out by qualified personnel only.
- Visually check the overall state of wear and tear of the external parts of the ent bollard.
- Make sure the rear-reflecting film is not worn.
- Make sure the lights work.
- Make sure the emergency manoeuvre is working properly.
- Make sure the control unit and safety devices are in proper w